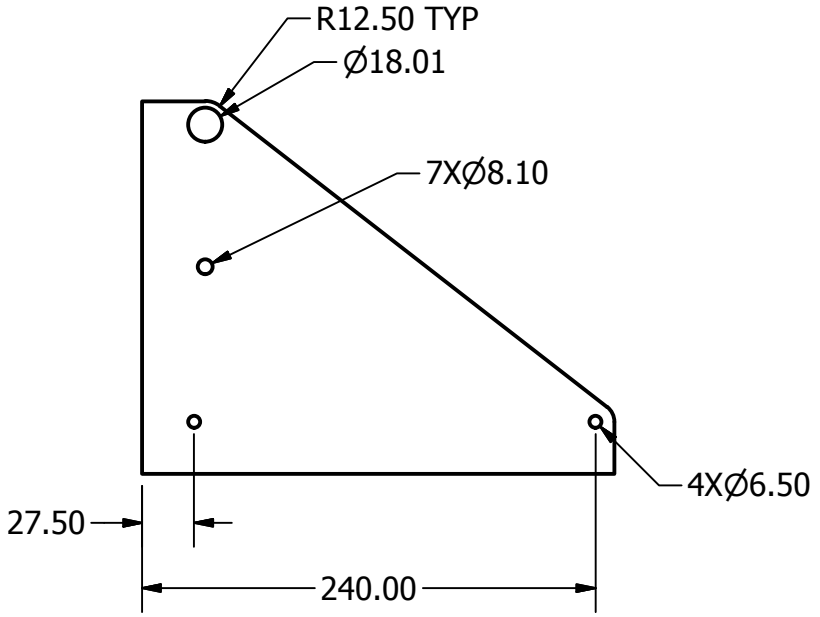
R12.50 TYP
Ø18.01
7XØ8.10
4XØ6.50
27.50
240.00

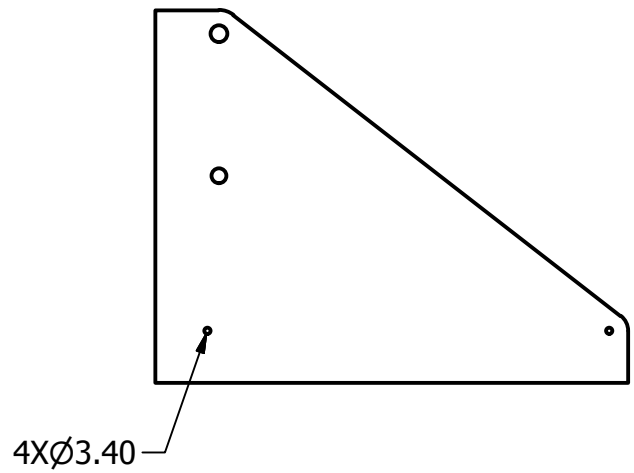
4XØ3.40

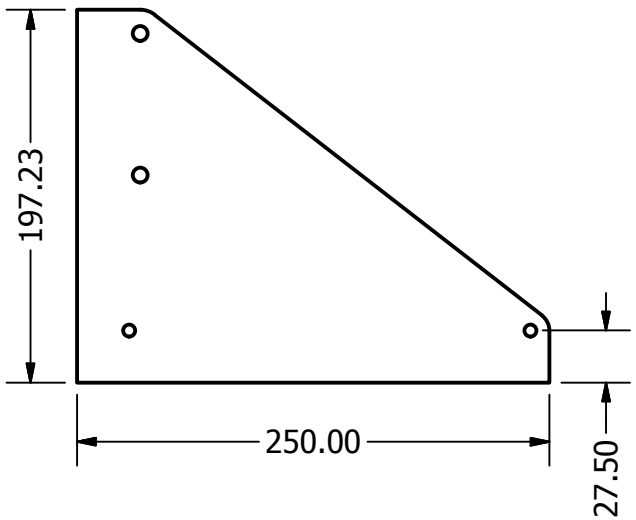
197.23
250.00
27.50

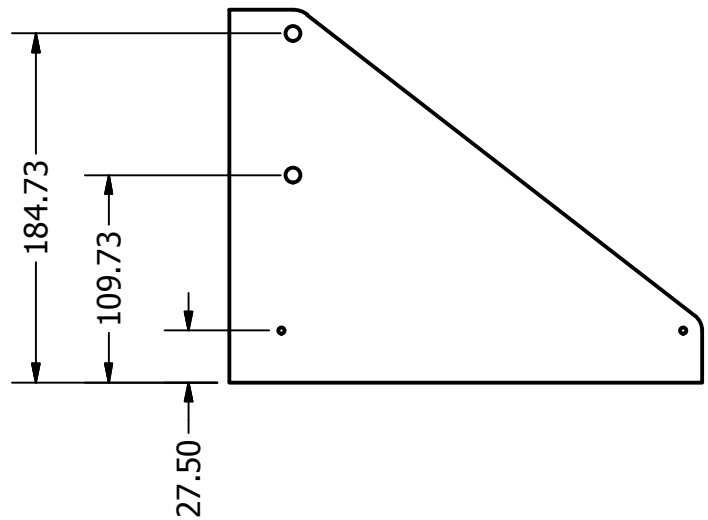
184.73
109.73
27.50