3D PRINT

MODIFY A RAMPS-FD V. 1.X

June 7, 2016 4.843 Visit 4 Min Read

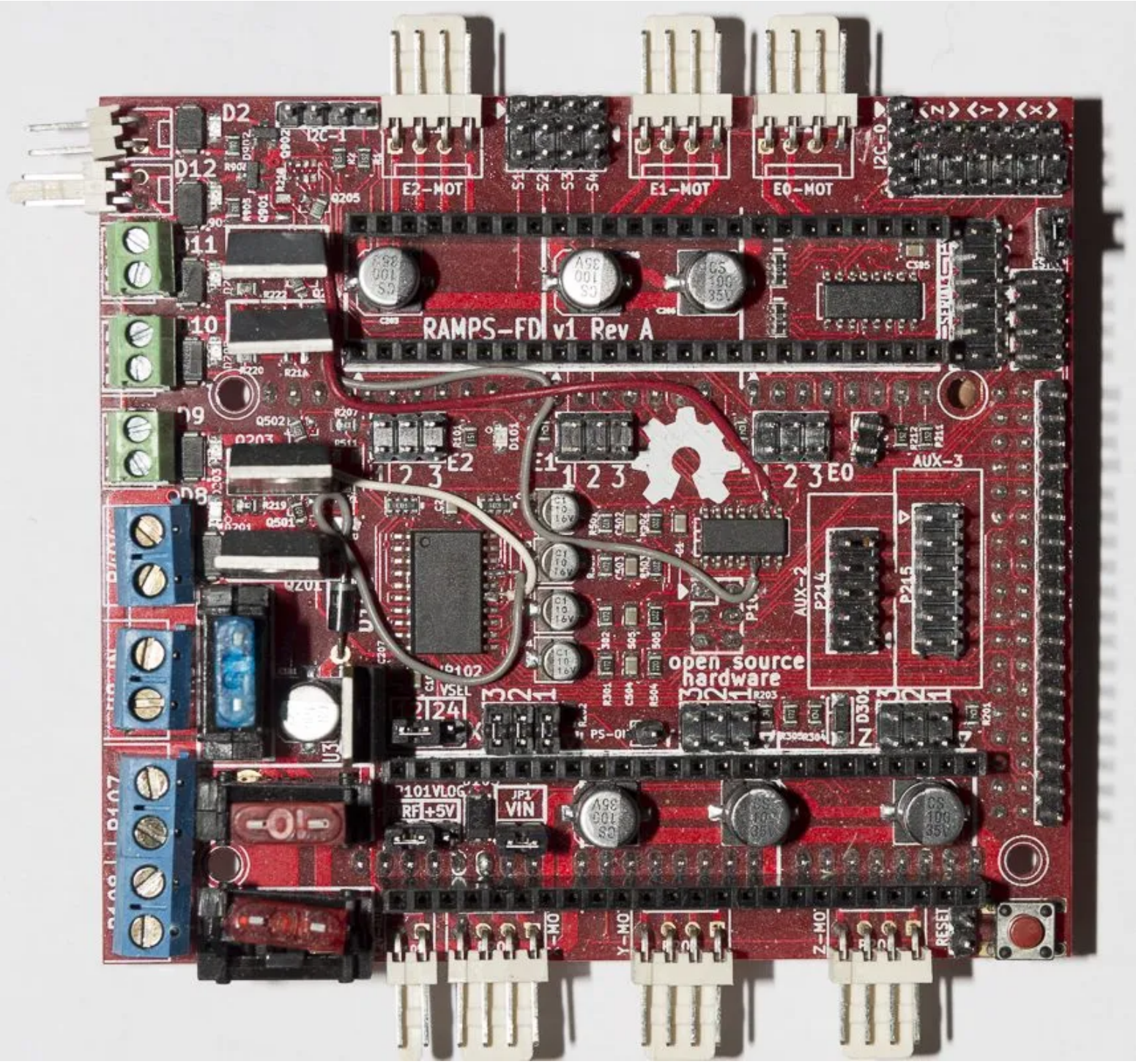

Before explaining how to MODIFY A RAMPS-FD V. 1.X let's make a small introduction...

In the world of 3D printers (and not only) innovation is obviously a daily topic which specifically takes the form of the

architecture with variable power based on the installed ARM processor technology.

As always, the first born are those of Genuino derivation, no longer deriving from the Genuino MEGA but from the Genuino DUE, which specifically mounts precisely in ARM of the Cortex M3 family of 84Mhz (AT91SAM3X8E produced by Atmel), this has meant that the porting of the main firmwares (which drive our machines) was a little simpler, given that the bulk of these firmwares, such as for example the very common Marlin Firmware and the Repetier, were developed on the Arduino IDE environment.

Having made this small preface, let's start by saying that the most recent (but also the most expensive) electronics are structured in a single board which is directly equipped with the ARM processor (which in most cases is always an Atmel SAM3X) and all the components that are needed to make the printer go.

Given the cost, however, they are less widespread, therefore online there is a low-cost shield for the DUE deriving from an OSHW (open source hardware) project that you can find on github at this link, unfortunately the versions that can be purchased online line all have multiple logic and operating bugs, because prior to version 2 which unfortunately is not yet on the market, this guide aims to explain how to modify a buggy RAMPS-FD to make it functional and safe enough.

Using a RAMPS-FD V1.x without solving the problems you run the risk of burning the DUE and melting the printer.

Bugfix della RAMPS-FD V.1.x

The main problems encountered in these cards are:

Inverse logic of the Mosfets and incorrect sizing of the same

This choice leads to a problem of uncontrolled overheating of the printer during the reset phases, firmware uploading and any malfunctioning of the DUE, as it is easy to imagine this case should not occur because it can be quite dangerous, moreover the MOSFETs that are installed they are undersized (or sized to the limit) this causes them to overheat a lot with the risk of further malfunctions.

Solution:

- **Remove the Mosfets from positions Q201, Q202, Q203, Q206**

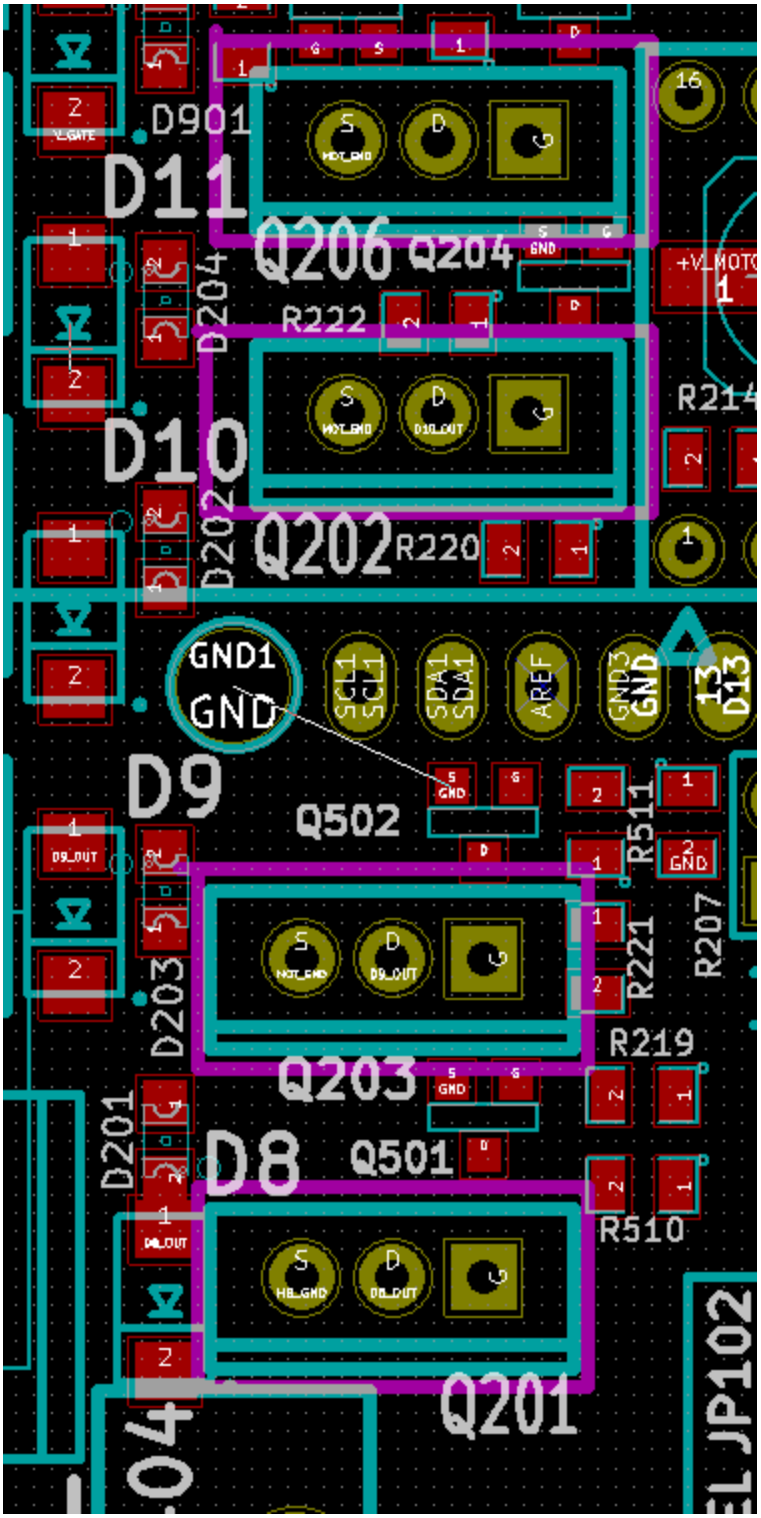

- Rimuovere i Transistor SMD Q501, Q502, Q204, Q205

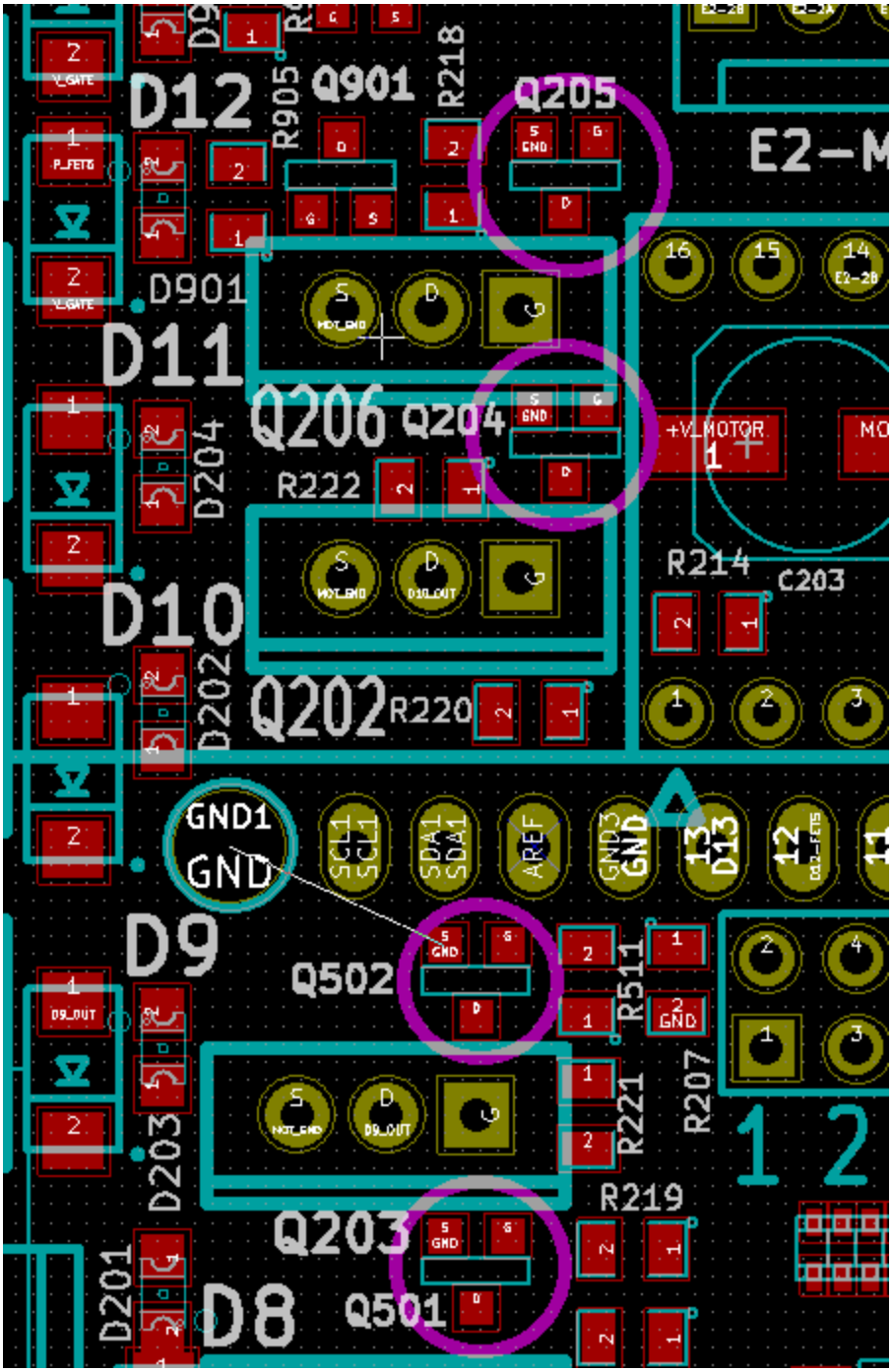

- Remove R510, R511, R214, R218, RP1 resistors (DON'T LOSE THESE 10K RESISTORS!)

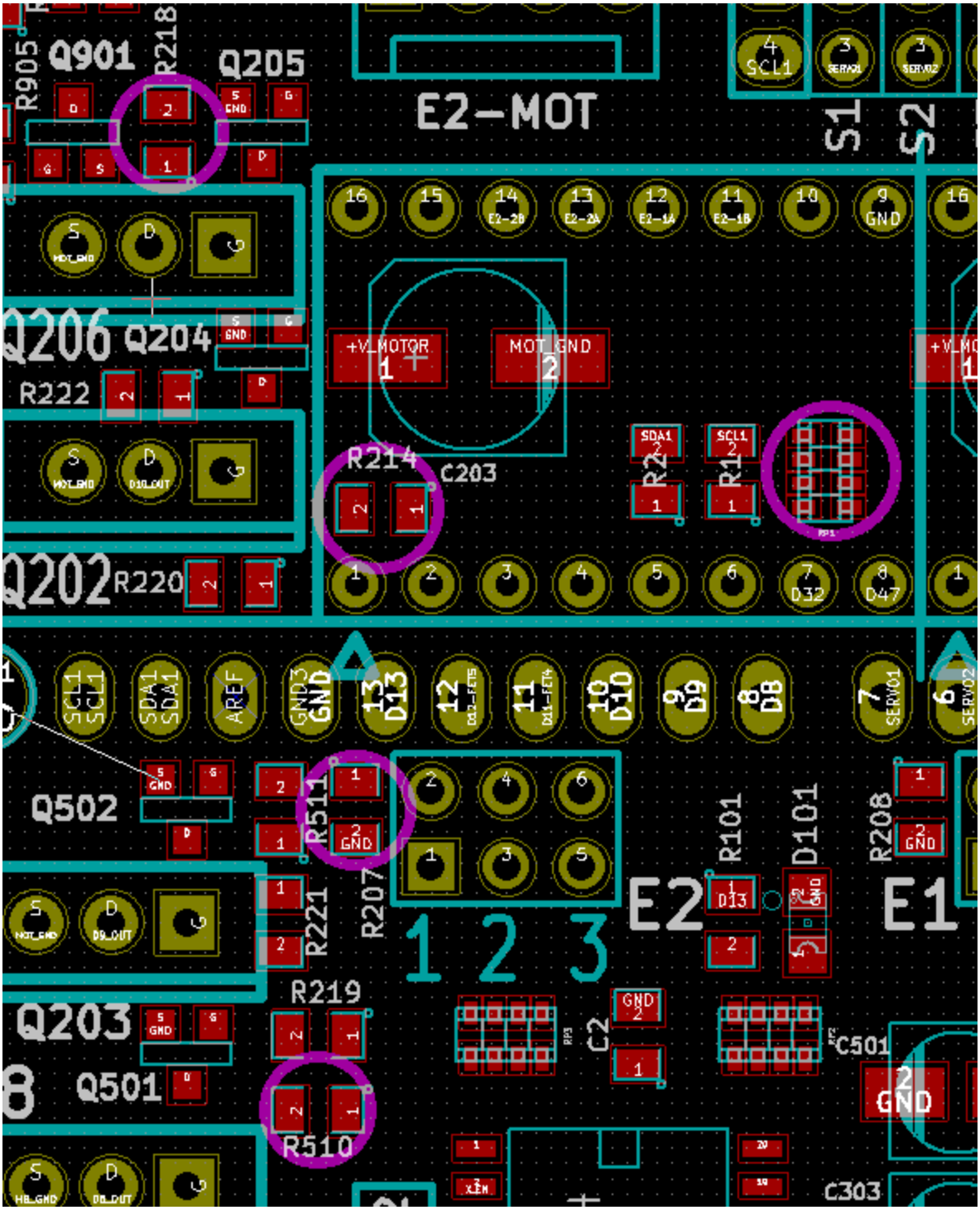

- Cut the tracks of pins 3 and 4 going to component RP3

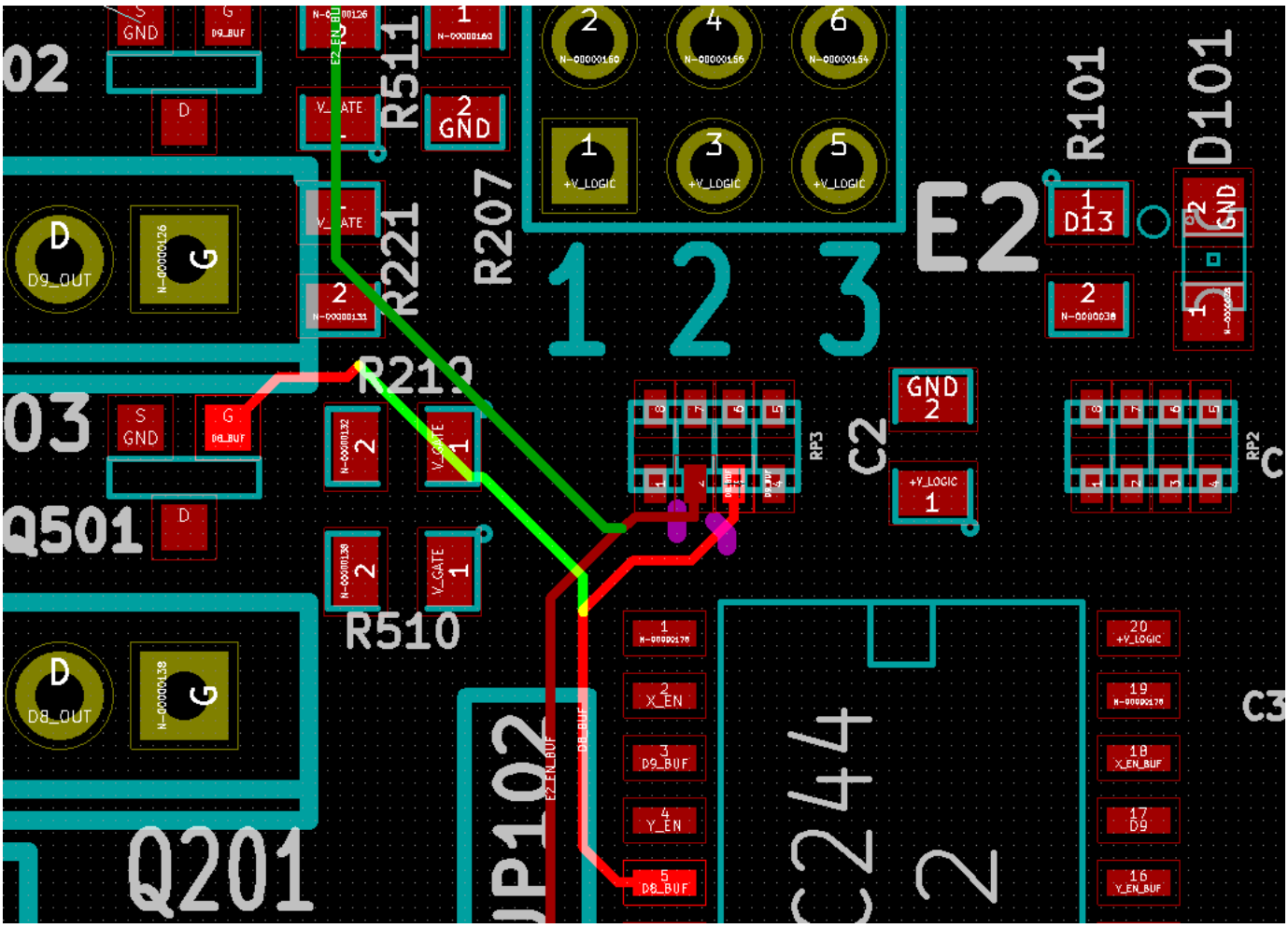

- Insert the previously recovered 10k resistors between Drain (D) and Source (S) in the pads of the transistors Q501, Q502, Q204, Q205.

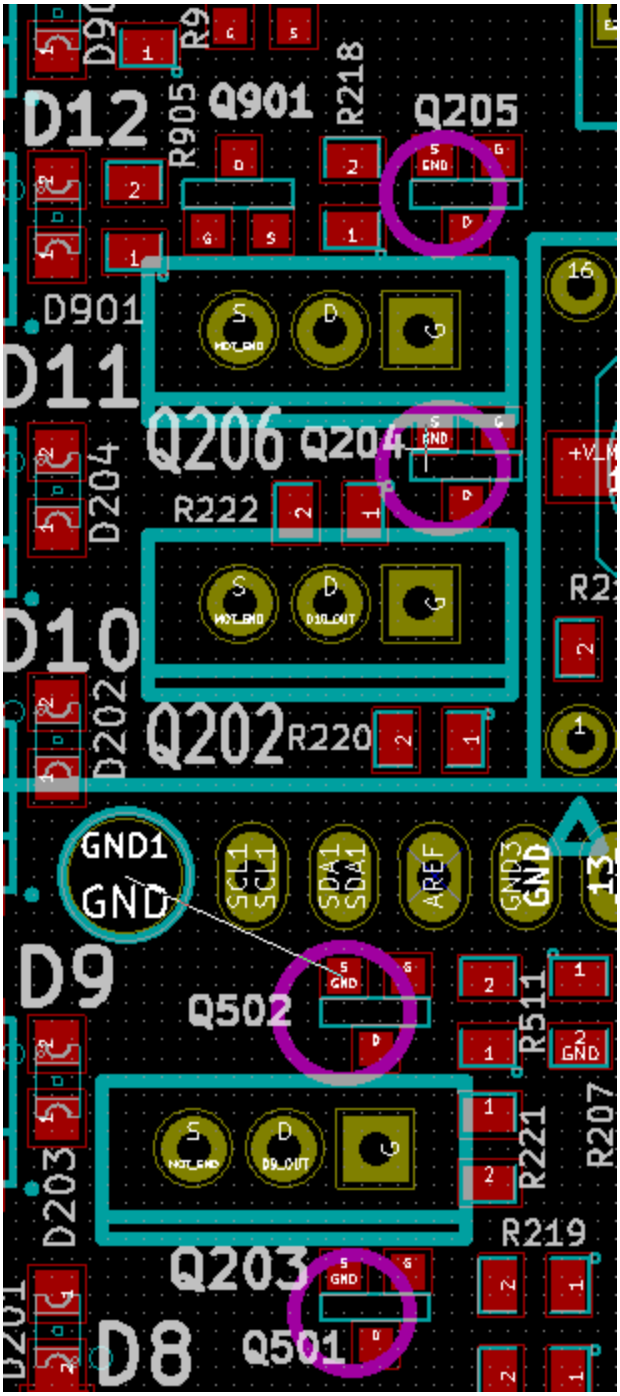

- Install the new IRLB8743 Mosfets in Q201, Q202, Q203, Q206 pads

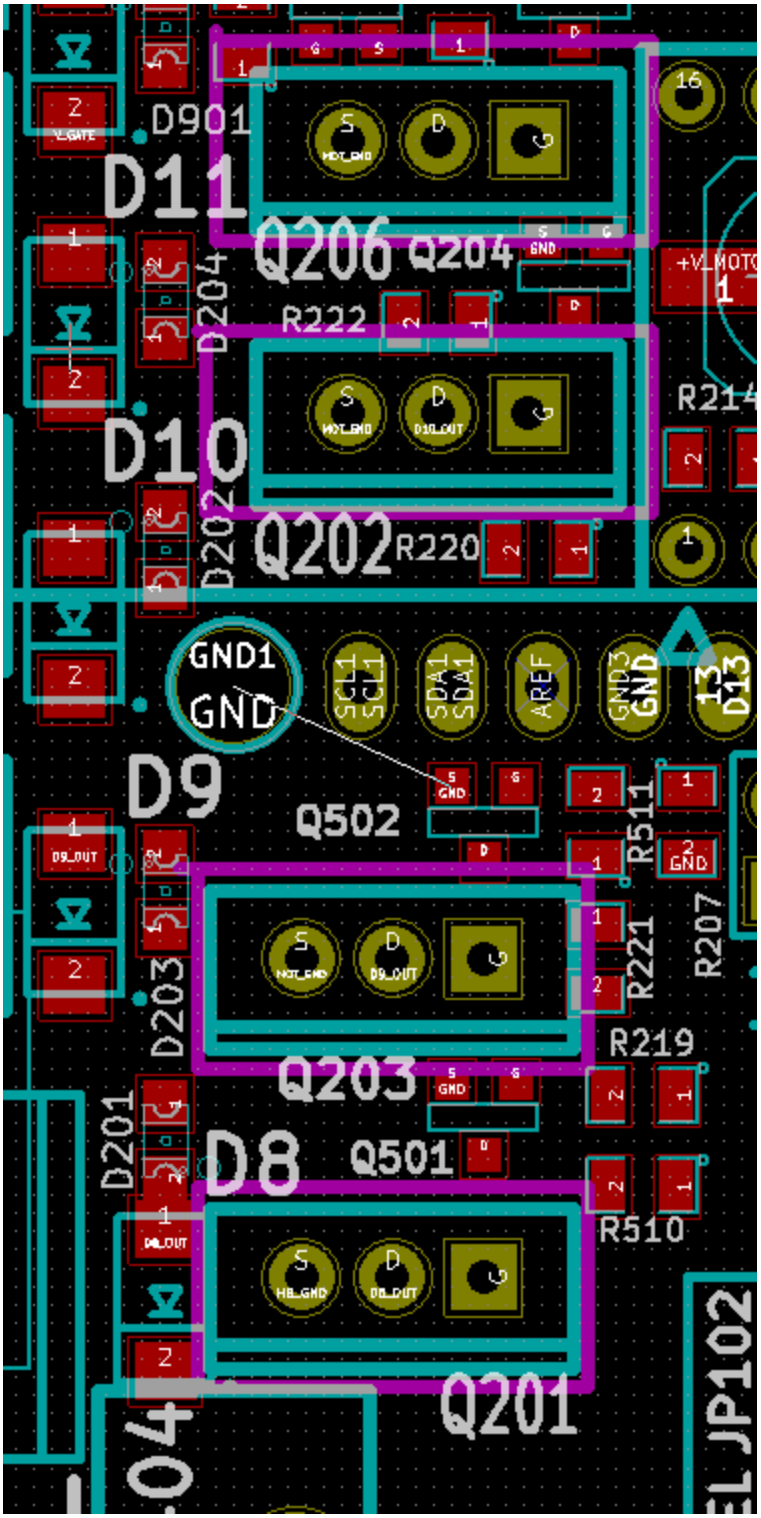

- Make the following connections:

  The Gate pin of Q201 is connected to U2-Pin 15

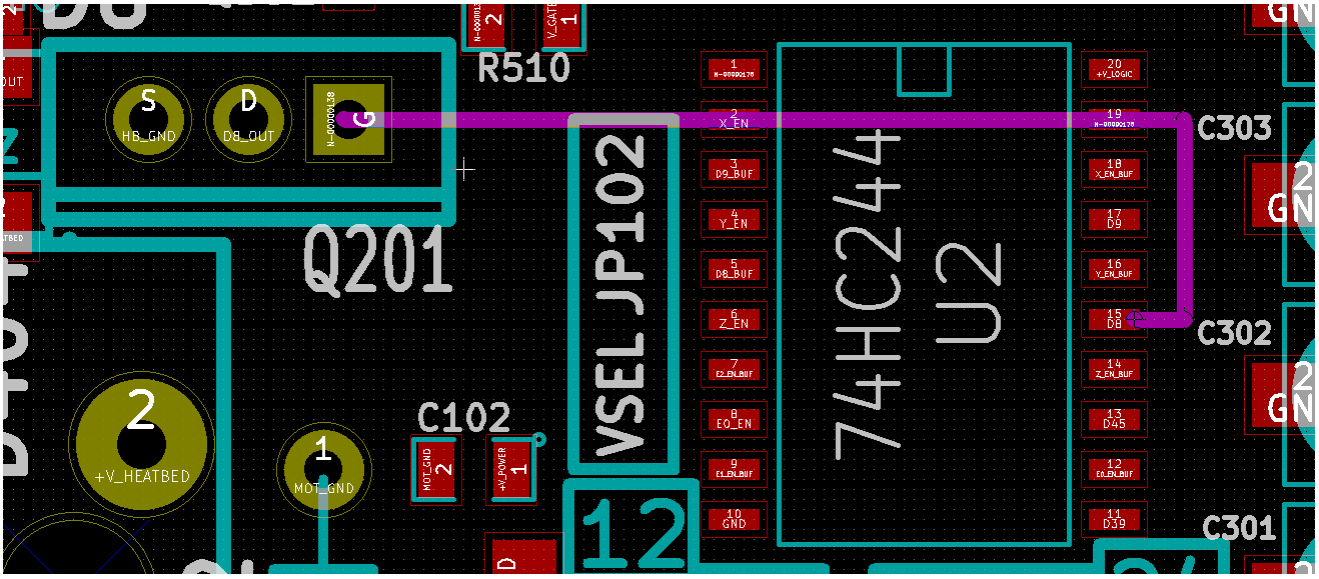

The Gate pin of Q203 is connected to U2-Pin 17

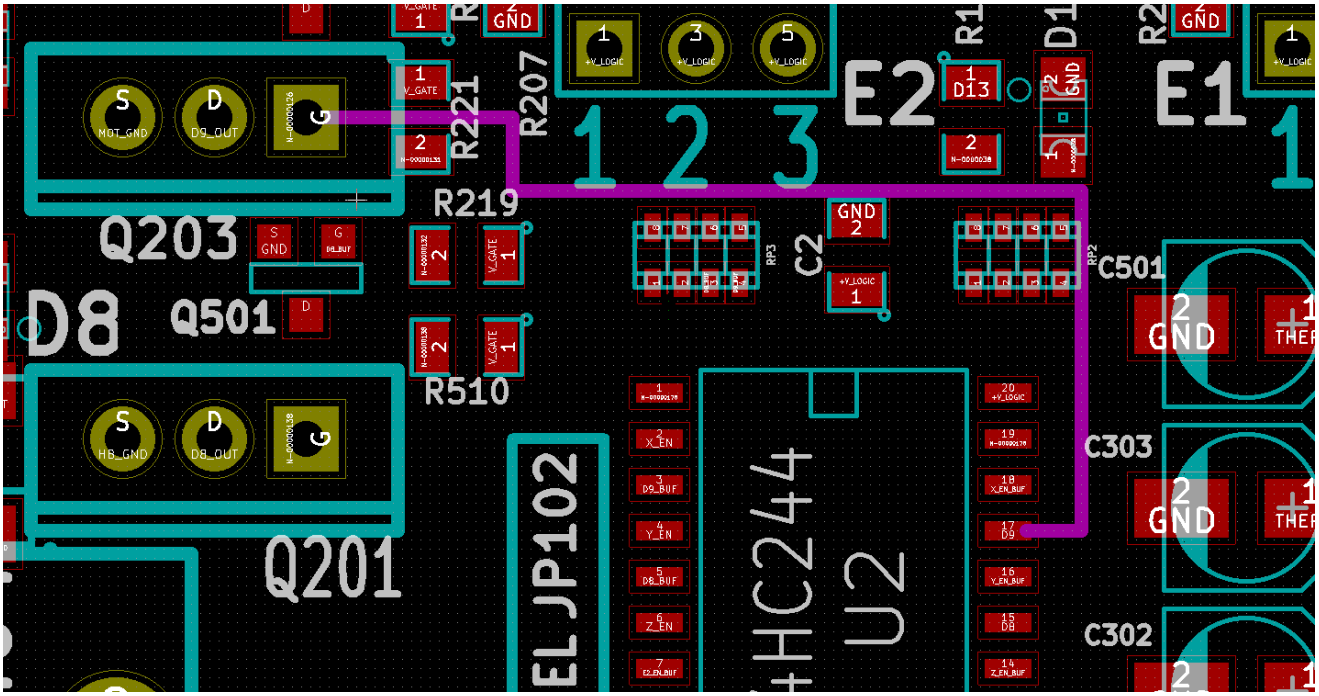

Gate pin of Q202 is connected to U1-Pin 5

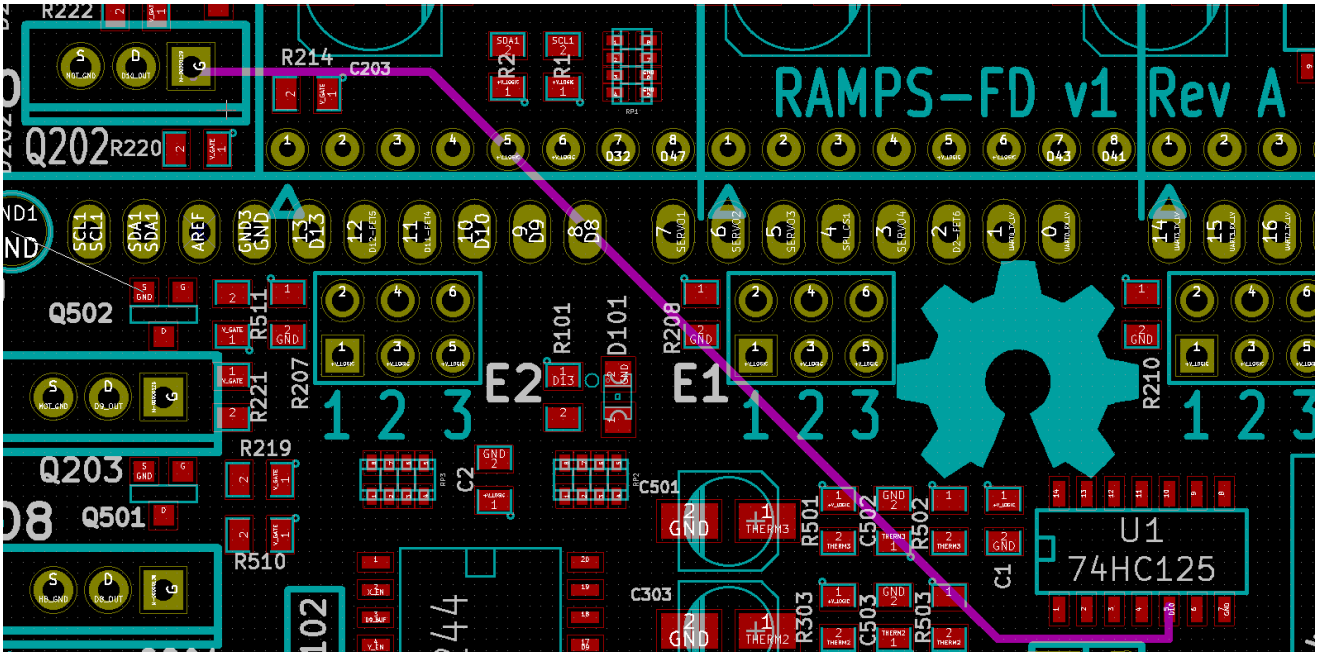

The Gate pin of Q206 is connected to U1-Pin 9

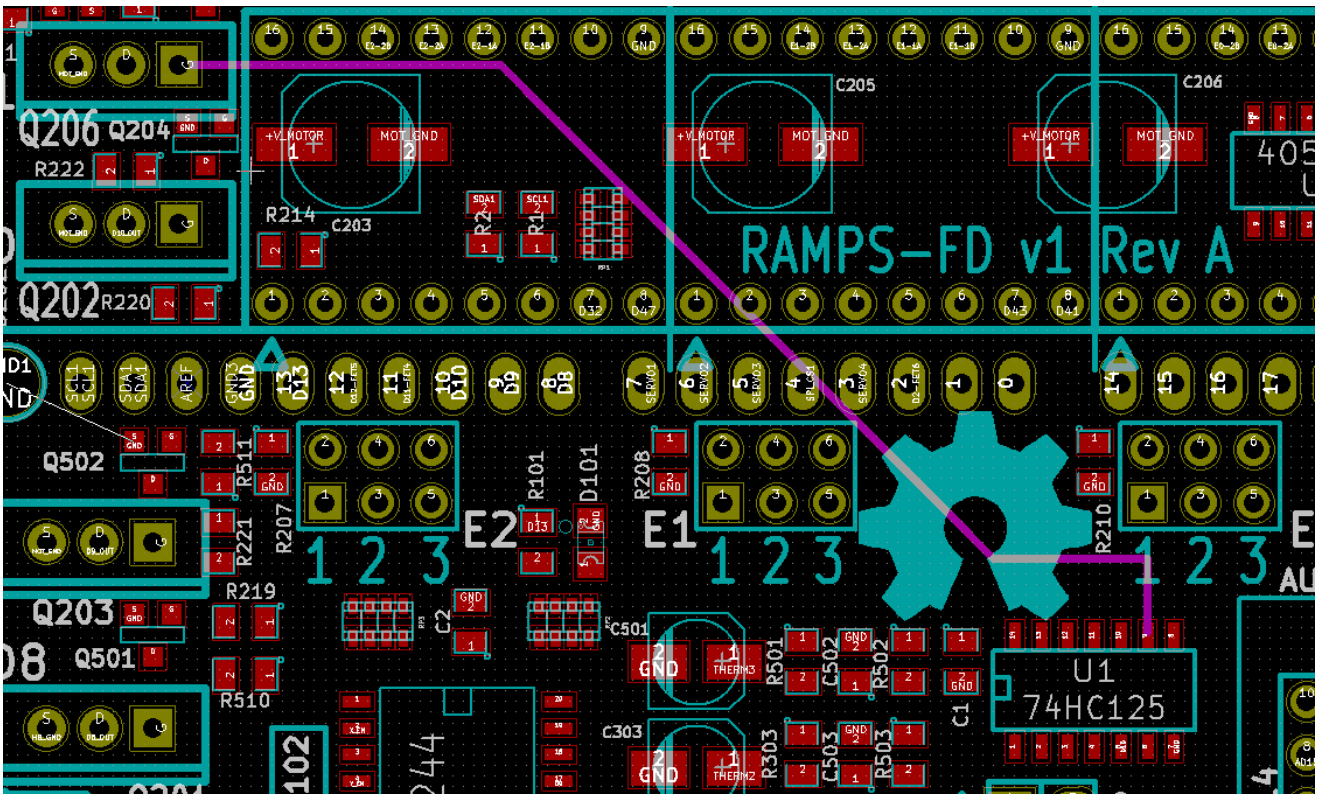

Stabilize the thermistor reading

The reading of the thermistors fluctuates greatly due to the incorrect sizing of the GND circuit

Solution:

- **Improve the connection to GND by soldering an electrical wire from at least $1mm^2$to the thermistor ground and then connecting it to a ground close to the GND pin of the DUE.**

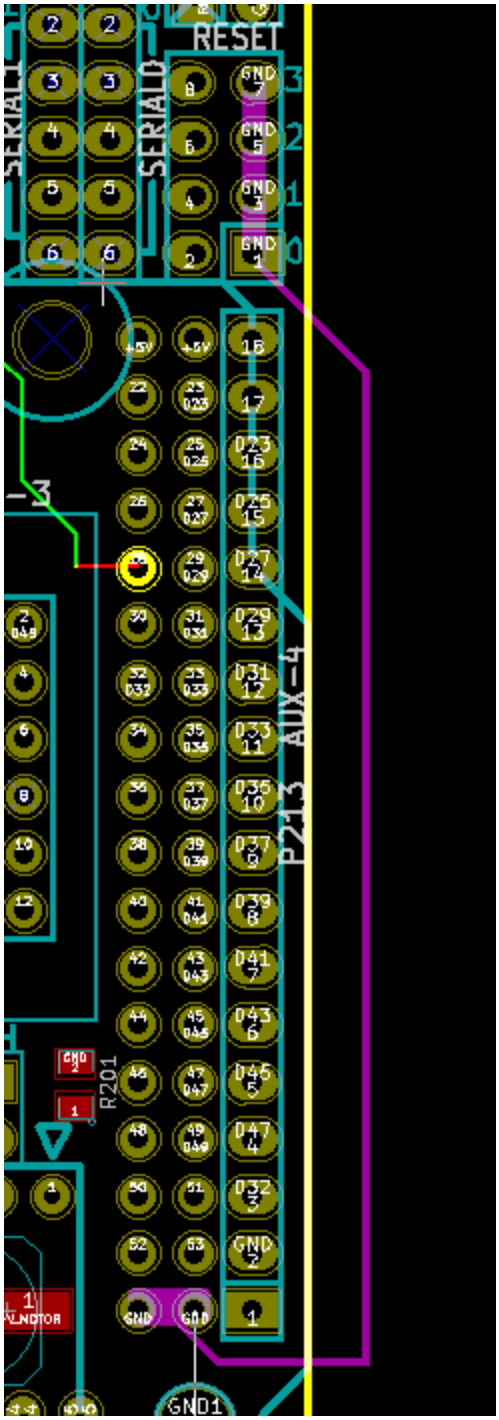

Insufficient 5V power supply coming from the TWO

By default the RAMPS-FD takes a 5V power supply from the DUE, which however has a power supply of just 150mA, which is insufficient to power all the electronics.

Solution

- **Cut all power supplies from the +5V coming from DUE and add an external power supply to power the RAMPS-FD**

Scheme of tracks to be cut

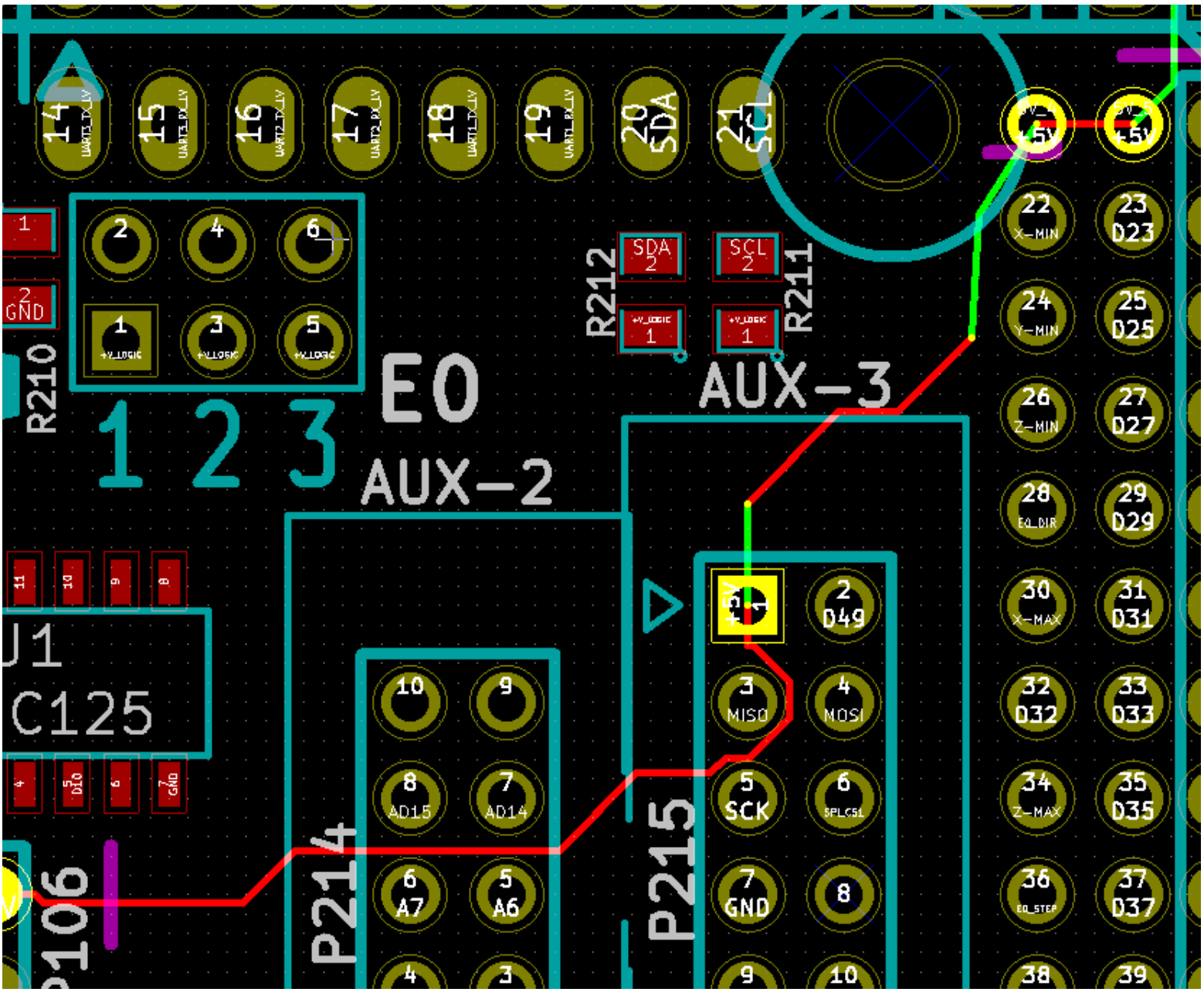

It is therefore necessary to remove the two pins circled in the screenshot below and add a DC/DC power supply calibrated at 5V such as this by connecting it to the input on the 12 volt terminal block pads and to the output on the two removed pins (obviously respecting the polarity) and the +5V output must also be connected to Pin1 of the P215 connector visible in the image above (so as to have power to power any printer display.)

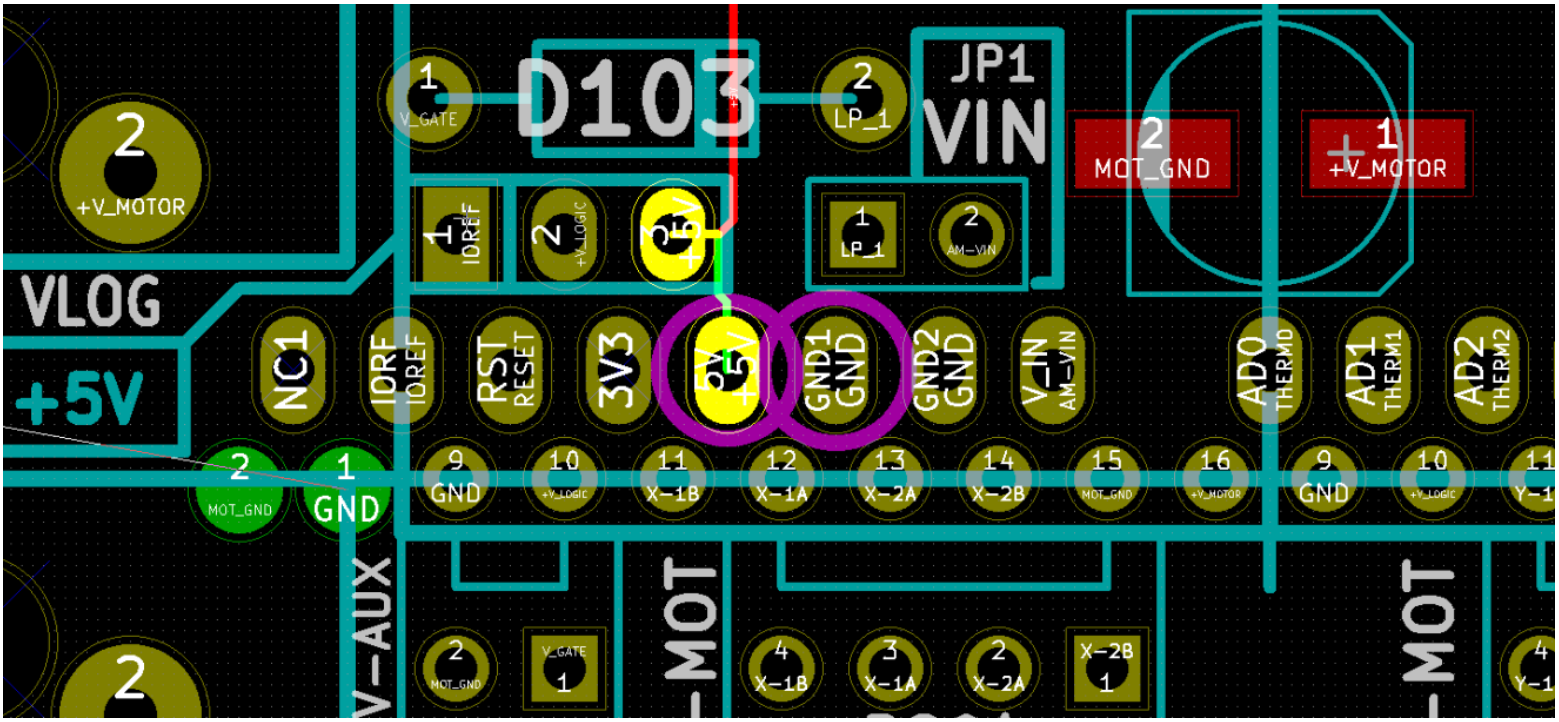

And here is the final result!

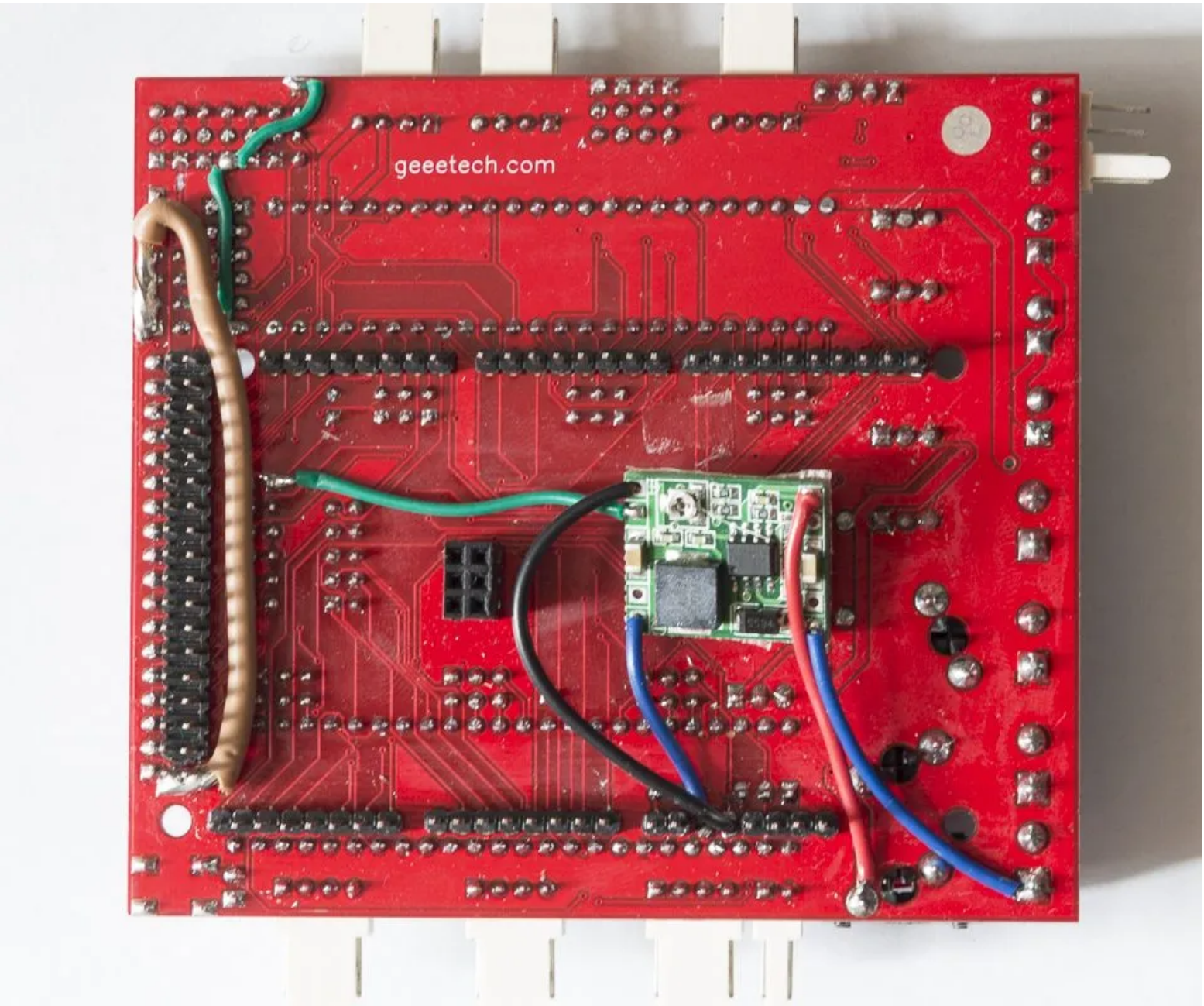
geeetech.com

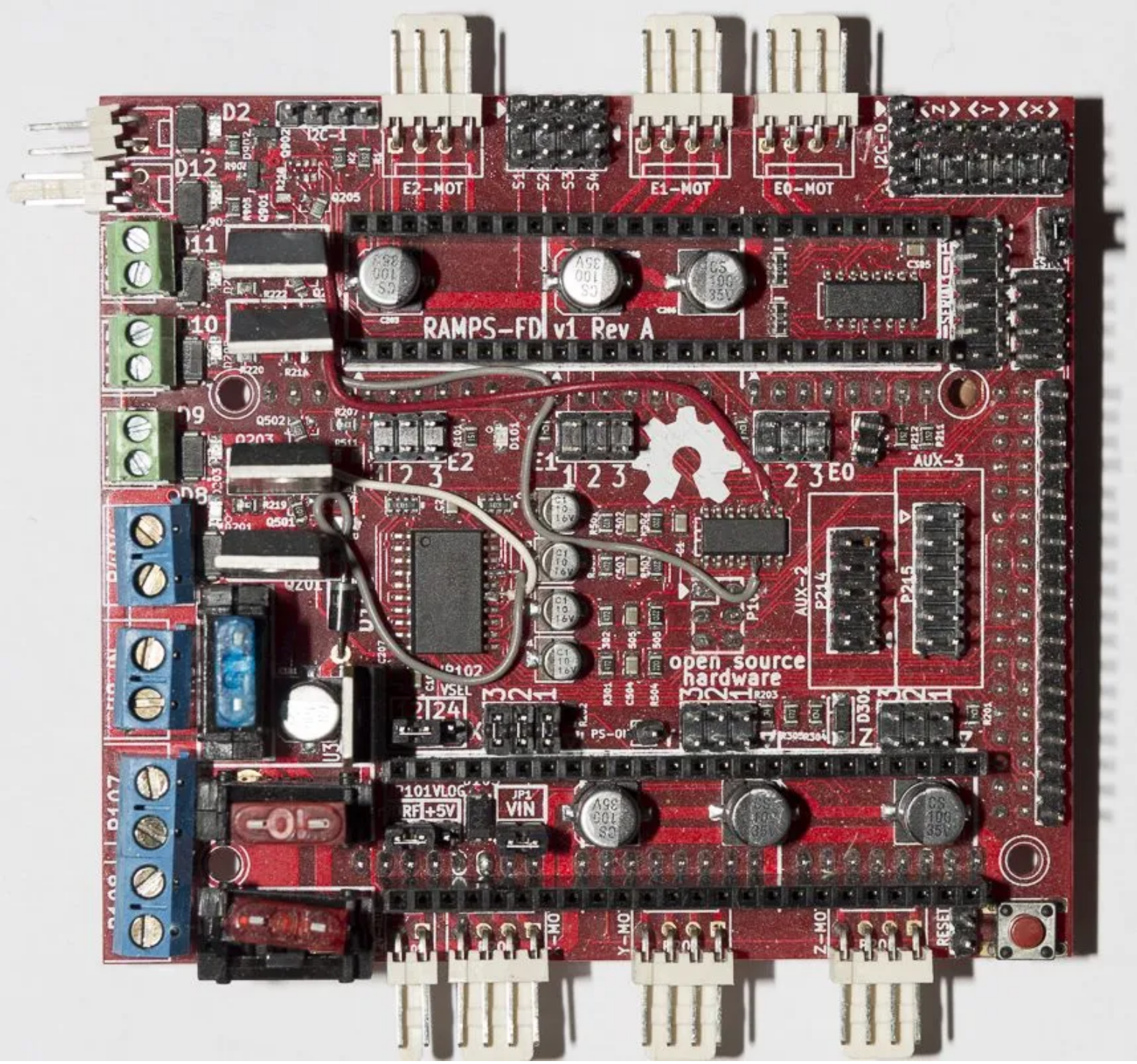

PLEASE NOTE: The added transformer must be glued with double-sided tape below the ramps-fd in a point where there are no welds and then must be covered with insulating tape so as to avoid short circuits.

INFO: the modifications listed in this article have been made partially following some discussions on the reprap.org forum and partially after improvements inserted by myself.

Related

DRV8825 or A4988, what changes
15 Maggio 2016
In "3D print"

STM32 Core!
October 29, 2016
In "Embedded"

Turning an Electric Oven into a Reflow Station – OVEN HACKING! –
25 Maggio 2016
In "Attrezzature"

Tags electronics hw_hacking

About the author

giutrec

5 Commenti

G

Partecipa alla discussione...

ENTRA CON

O REGISTRATI SU DISQUS ?

Nome

1 Condividi

M

Andriy Golovnya

3 anni fa

Hi there!
Thanks for your visual guide. It helped me a lot to find components on the board.
I've noticed however a mismatch on you images. You write about cutting traces of pin 3 and 4 of PR3, but yo
and 3. It does not fit to a guide at https://reprap.org/forum/re... as well. Does your board works as intended
I've solver this issue with PR3 by disordering PR3 and soldering it back with 2 pins shift, so pin 3 and 4 stay

0 0 Rispondi • Condividi ›

A

Andrey

6 anni fa

Questo è un errore?

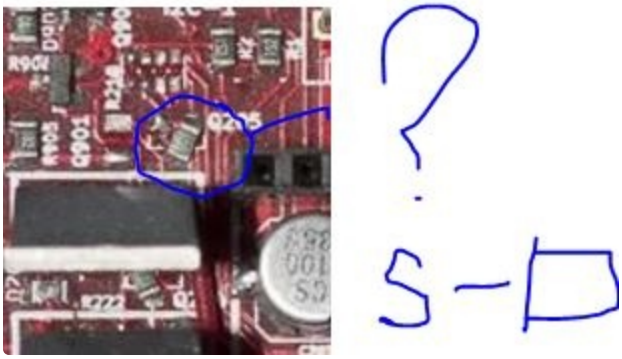

0 0 Rispondi • Condividi ›

A

Andrey

6 anni fa

Grazie per il vostro progetto!

0 0 Rispondi • Condividi ›

A

Andrey

6 anni fa edited

Saluti!
Ho molte domande:
1) Dopo queste modifiche, posso utilizzare la rampa-FD V.2 ?
2) ancora sono necessarie per rendere il U2 resistenze cablaggio 10k e U1 come indicato qui ?:

vedi altro

0 0 Rispondi • Condividi ›

Giuseppe Treccarichi Andrey

6 anni fa

uploading del firmware, e senza i problemi generati dalla logica intertita dei mosfet.
L'utente del blog che mi hai indicato ha fatto un lavoro alternativo a cui avevo pensato anche io ma
di modifica che si sarà meno elegante ma è realizzabile praticamente da chiunque sappia saldare c
di kerature.org bisognava avere una manualità particolare specialmente nel maneggiare componer

Comunque a perer mio no non serve che fai anche quelle modifiche se hai già realizzato quelle ele
La scheda di questa guida è stata modificata nel 2015 e da allora funziona senza dare alcun proble

0 0 Rispondi • Condividi ›