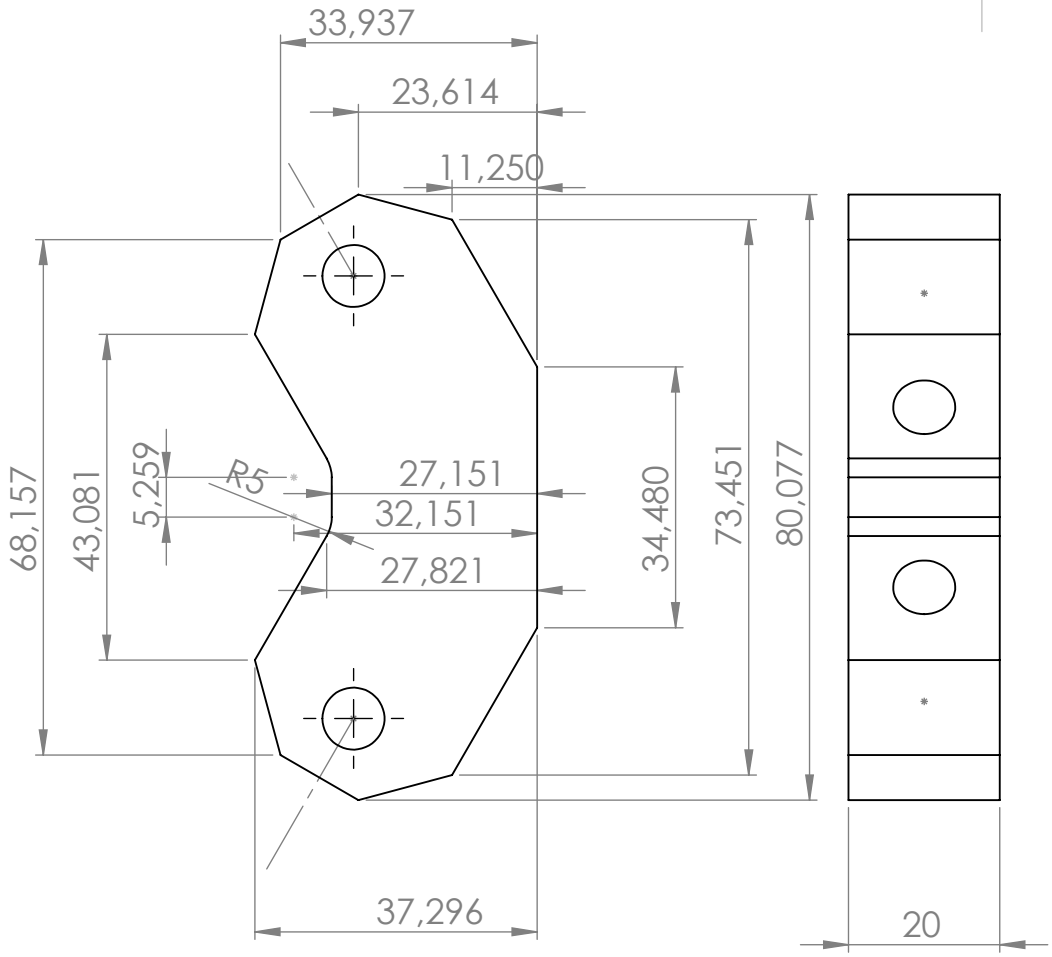

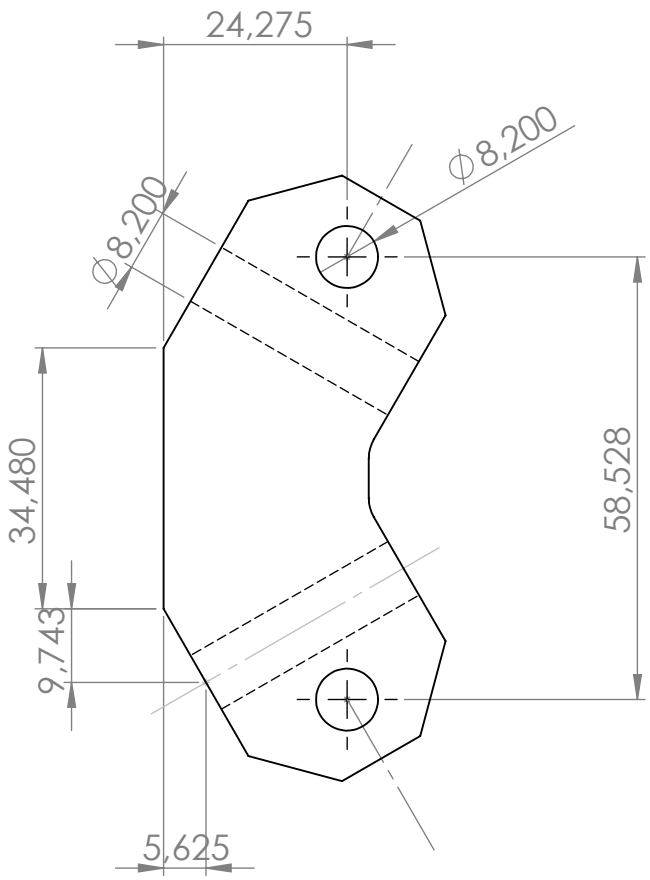

UNLESS OTHERWISE SPECIFIED: DIMENSIONS ARE IN MILLIMETERS SURFACE FINISH: TOLERANCES: LINEAR: ANGULAR:	FINISH:			DEBUR AND BREAK SHARP EDGES	DO NOT SCALE DRAWING	REVISION
	NAME	SIGNATURE	DATE		TITLE:	
DRAWN					Frame-Vertex	
CHK'D						
APPV'D						
MFG						
Q.A				MATERIAL:	DWG NO. Frame-Vertex	A4
				WEIGHT:	SCALE:1:1	SHEET 1 OF 1