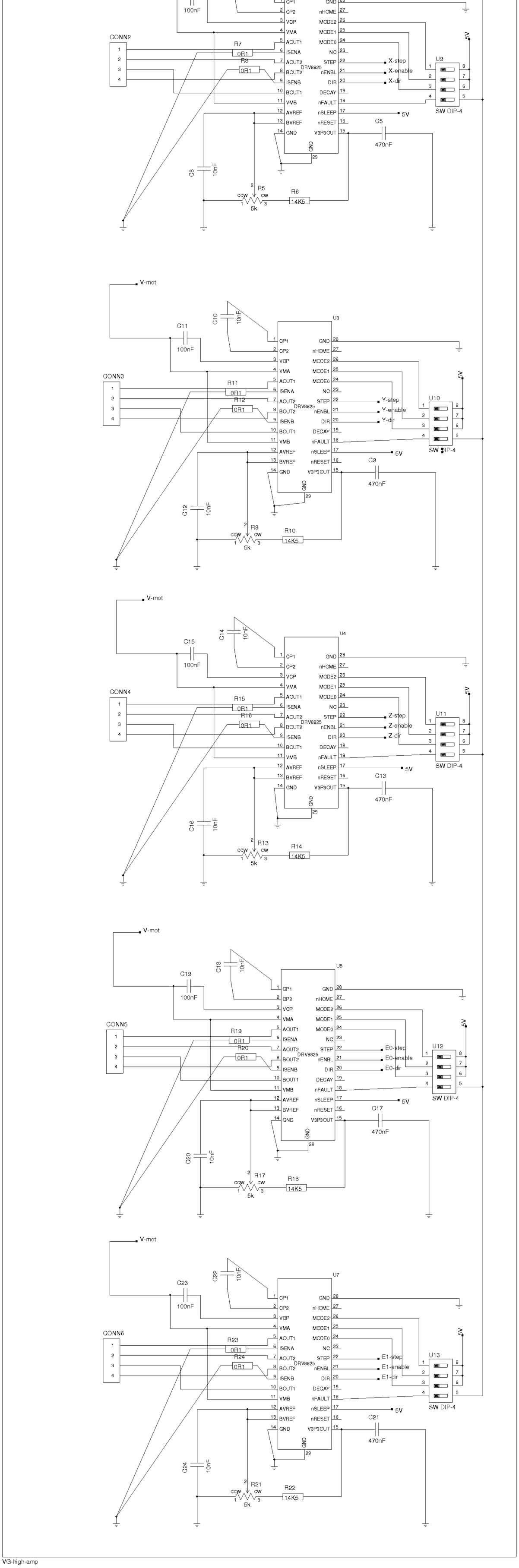
CONN2
R7 0R1
R8 0R1
DRV8825
X-step
X-enable
X-dir
U9
SW DIP-4
5V
C5 470nF
C8 10nF
R5 5k
R6 14K5
V-mot
C11 100nF
C10 10nF
U3
CONN3
R11 0R1
R12 0R1
Y-step
Y-enable
Y-dir
U10
C9 470nF
C12 10nF
R9 5k
R10 14K5
V-mot
C15 100nF
C14 10nF
U4
CONN4
R15 0R1
R16 0R1
Z-step
Z-enable
Z-dir
U11
C13 470nF
C16 10nF
R13 5k
R14 14K5
V-mot
C19 100nF
C18 10nF
U5
CONN5
R19 0R1
R20 0R1
E0-step
E0-enable
E0-dir
U12
C17 470nF
C20 10nF
R17 5k
R18 14K5
V-mot
C23 100nF
C22 10nF
U7
CONN6
R23 0R1
R24 0R1
E1-step
E1-enable
E1-dir
U13
C21 470nF
C24 10nF
R21 5k
R22 14K5

VG-high-amp

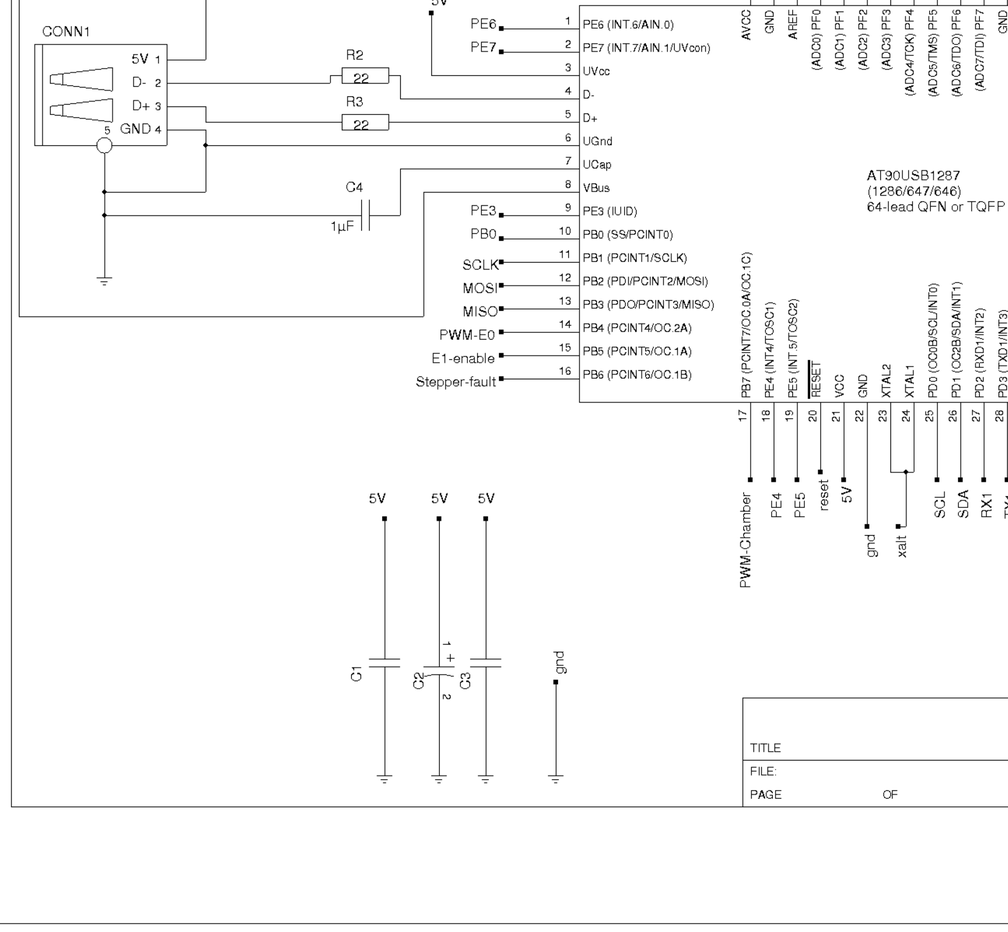
CONN1
5V
D-
D+
GND
R2 22
R3 22
C4 1µF
AT90USB1287
(1286/647/646)
64-lead QFN or TQFP
PE6
PE7
PE3
PB0
SCLK
MOSI
MISO
PWM-E0
E1-enable
Stepper-fault
PWM-Chamber
reset
gnd
xalt
SCL
SDA
RX1
C1
C2
C3
TITLE
FILE:
PAGE
OF

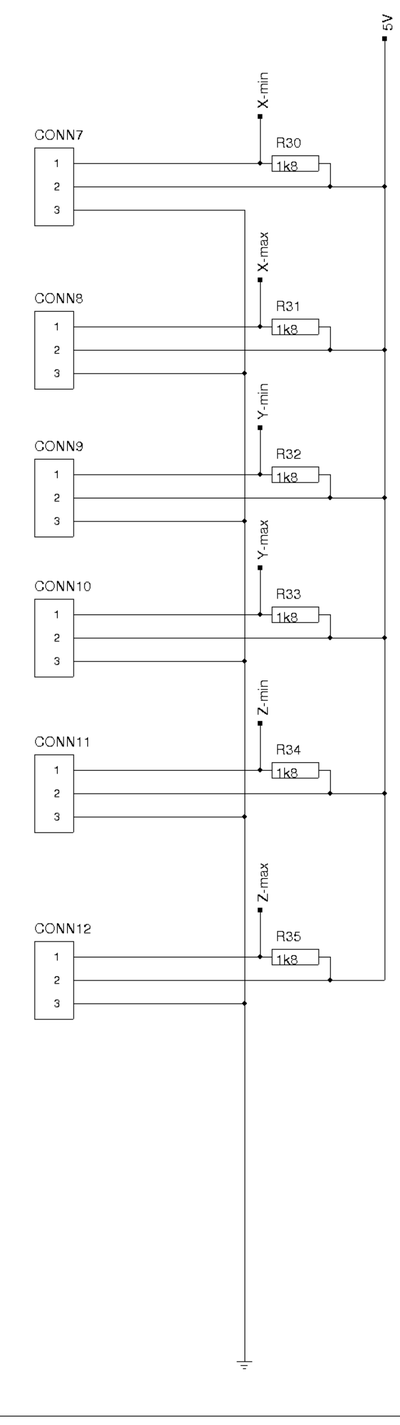
CONN7
CONN8
CONN9
CONN10
CONN11
CONN12
X-min
X-max
Y-min
Y-max
Z-min
Z-max
R30 1k8
R31 1k8
R32 1k8
R33 1k8
R34 1k8
R35 1k8
5V

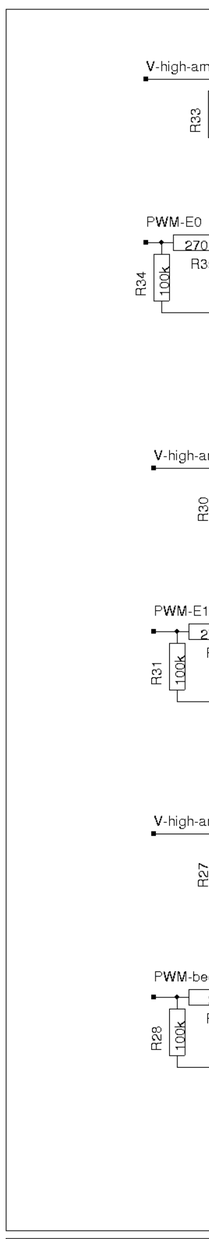
V-high-amp
R33
PWM-E0
R34
100k
V-high-amp
R30
PWM-E1
R31
100k
V-high-amp
R27
PWM-bed
R28
100k

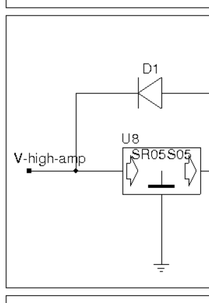
D1
U8
SR05S05
V-high-amp

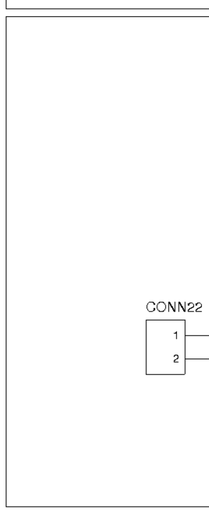
CONN22

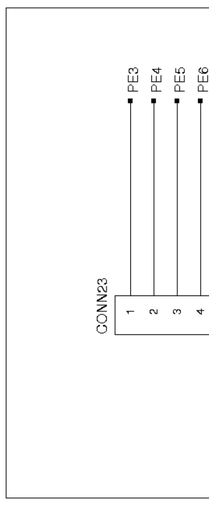
CONN23
PE3
PE4
PE5
PE6

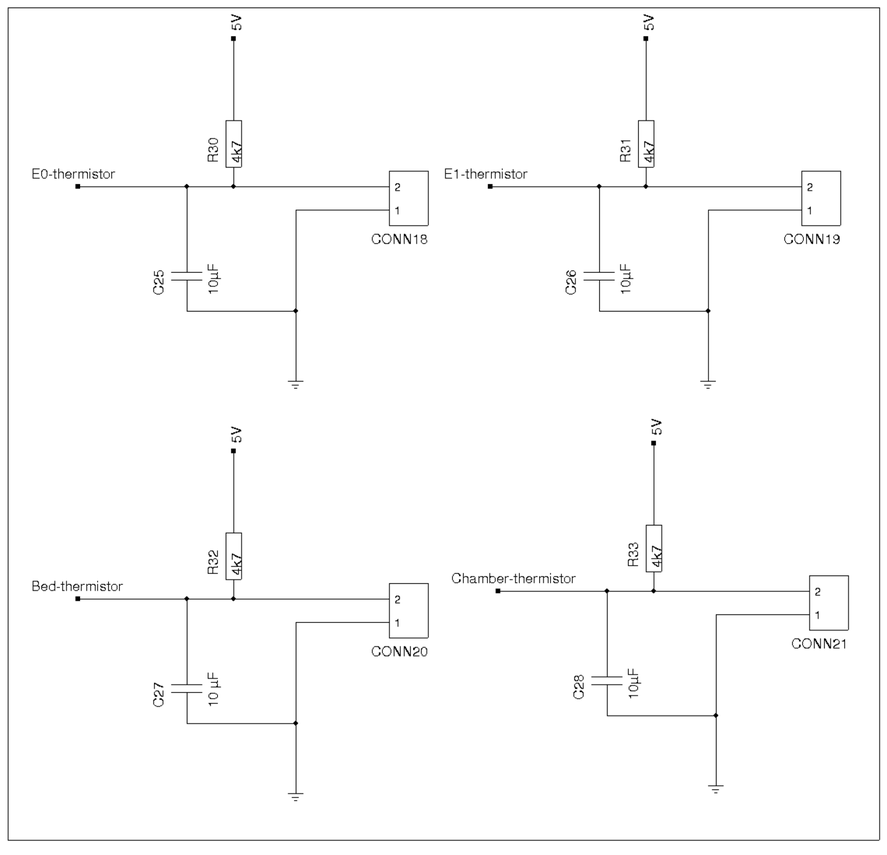
E0-thermistor
E1-thermistor
Bed-thermistor
Chamber-thermistor
R30 4k7
R31 4k7
R32 4k7
R33 4k7
C25 10µF
C26 10µF
C27 10 µF
C28 10µF
CONN18
CONN19
CONN20
CONN21
5V