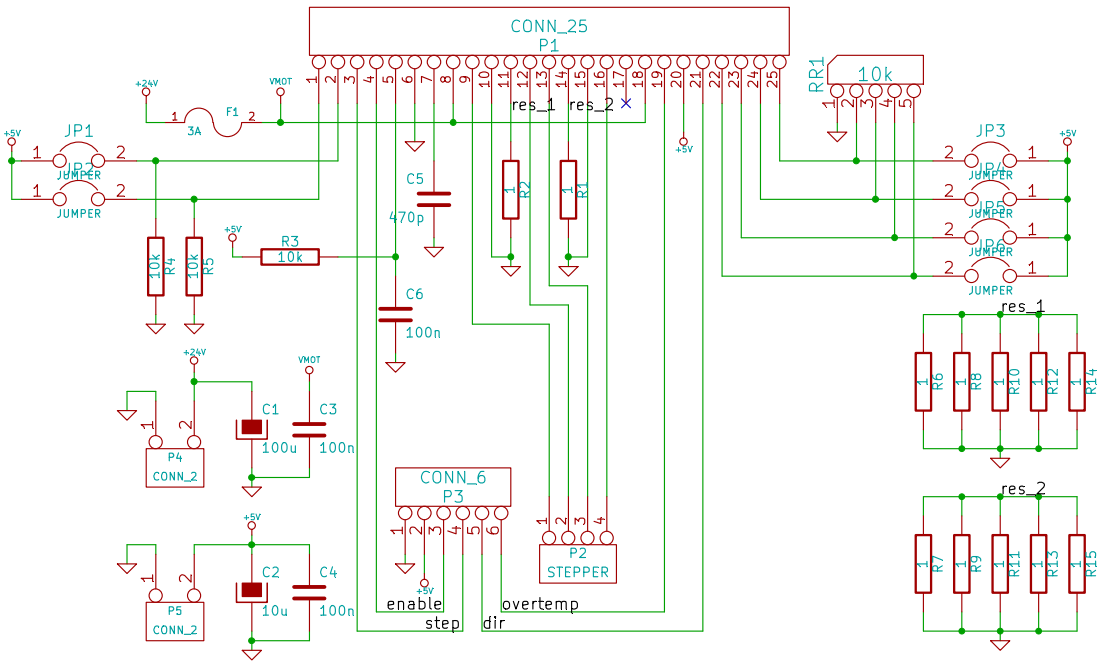
CONN_25
P1
RR1
10k
JP1
JUMPER
JP2
JUMPER
JP3
JUMPER
JP4
JUMPER
JP5
JUMPER
JP6
JUMPER
F1
3A
+24V
VMOT
+5V
R3
10k
R4
10k
R5
10k
C5
470p
C6
100n
R1
R2
res_1
res_2
C1
100u
C3
100n
C2
10u
C4
100n
P4
CONN_2
P5
CONN_2
CONN_6
P3
P2
STEPPER
enable
step
dir
overtemp
R6
R8
R10
R12
R14
R7
R9
R11
R13
R15