Chinese 3 and 4 Axis Stepper Driver Boards Using TB6560

The boards are an economical way in which to purchase the components for a stepper motor driver board utilising the Toshiba TB6560 IC and to connect safety switches.

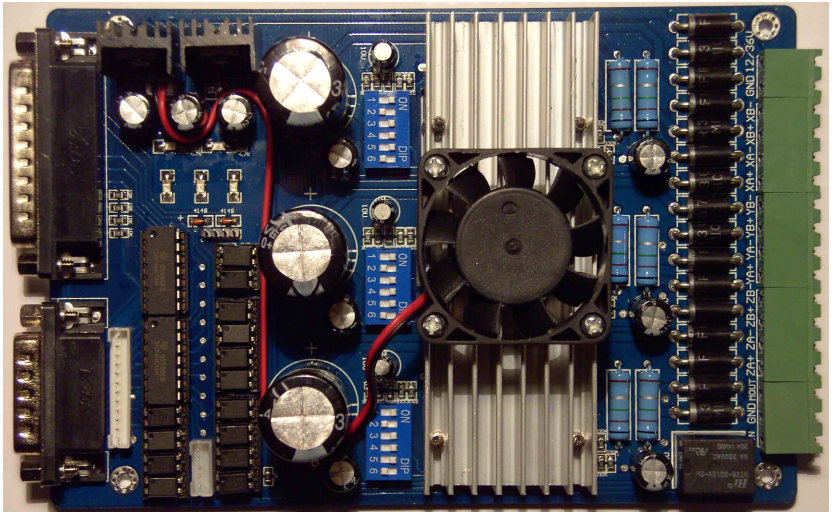

Circuit Description

The circuit is conventional. Control signals from the parallel port are applied to the 8 bit wide bus and in addition, some bi-directional control lines are also used. Four lines, connected by a 9 pin D socket and SIL header, can be used to return homing or limit switch information back to the host computer.

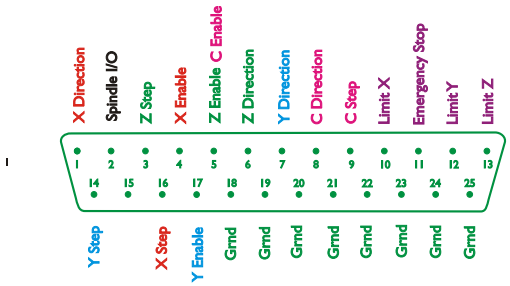

The input lines are pulled down by 6.8M resistors, probably intended to provide some anti-static resistance. All traffic to and from the parallel port is optically isolated by a combination of the 74HC14 inverting Schmitt triggers and the PC817 opto-isolators. Thereafter the signals are applied to the enable, clockwise/counterclockwise, and clock controls of the four TB6065AHQs. Other options are selectable in hardware via the DIP switches which are controlled as follows:

MOTOR CURRENT	SWITCH 1	SWITCH 2
100%	ON	ON
75%	ON	OFF
50%	OFF	ON
25%	OFF	OFF

DECAY MODE	SWITCH 3	SWITCH 4
FAST	ON	ON
25% DECAY	ON	OFF

50% DECAY	OFF	ON
100% DECAY	OFF	OFF

MICROSTEPPING	SWITCH 5	SWITCH 6
1	ON	ON
1/2	ON	OFF
1/16	OFF	ON
1/8	OFF	OFF

A relay RL1 and the associated transistor Q1 provide control of a high current to a further motor if required. The four CLOCK signals CLK1, CLK2 & CLK3 are monitored by Q3, Q4, & Q5 driving four LEDS D21, D25, D31 & D32. These are visible on the top surface of the board near the power supply heat sink. Two other LEDs show the presence of the 5V and 12V supplies. A 9 pin D socket and a SIL header provide access to signal points at ZA - ZJ on the schematic which are also connected to pins 10, 11, 12 and 13 of the D25 header. These provide facilities for limit switches and emergency stop. A 15 pin D socket and SIL header provide contacts to drive a proprietary display/control device.

Problems

1) Power on sequence does not follow Toshiba schedule. Hold control pins low and turn on and stabilize V_{DD} before applying $V_{MA/B}$. Corrected by removing D1and attaching separate supply to board for 12V regulator

2) The TB6560 uses the rising edge of the CLOCK input. The slow response time of the opto-coupler combined with the passive pull-up resistor allows system noise to cause unstable driver circuit operation if the on chip oscillator is run faster than 44 Hz. C_{OSC} fitted is 1000 pF.

4) Drive Current Manipulated by STEP signal. The driver reduces current to the stepper motors when the motors are idle. This is accomplished by pulling the drive current set input T2 low when the CLOCK signal is active high. This departs from the reference design of the TB6560 specification allowing the motors to be over-driven with higher than programmed drive current and artificially raises the lowest current motor that the controller board can safely drive. This extra circuit can lead to instability of the CLK response. Disable by removing the resistors associated with the control transistor.

5) Potential for Overheating of 12V Voltage Regulator. This can readily occur if an unmodified board is fed from a greater than 12V supply. The cooling fan is fed directly from the 12V regulator output adding significantly to the loading of the device. The 12V regulator will shut down if it overheats protecting itself; such a shutdown will result in lost steps of an active motor. Power the cooling fan with an external supply or (with suitable step down circuit) from the stepper motor supply voltage directly.

6) The board is marked for input voltage "12v to 36v" but the Toshiba specification indicates maximum operating voltage of 34V. But even that is probably not a safe operating point due to potential stepper motor generated voltage spikes. The controller board output diodes will clamp large over-voltage spikes when the diode breakdown voltage is reached, but the breakdown voltage is likely to be above the maximum voltage the driver IC can sustain without damage. Limit input voltage to 30v or less to provide margin of safety for operation.

7) There is a FR301 diode in the motor voltage supply to each TB6560. Back EMF causes current to be dumped into the 3300uF decoupling capacitor.

8) No back EMF diode on the coil of the relay. Add diode.

9) Pins 25 of the TB6560 extends over the trace from pin 23. Trim back.

Emergency and Limit Switch Circuits

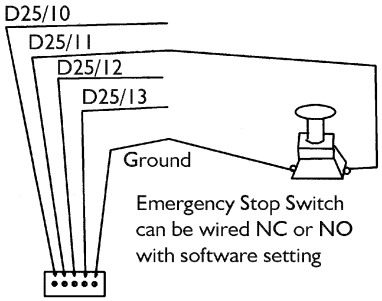

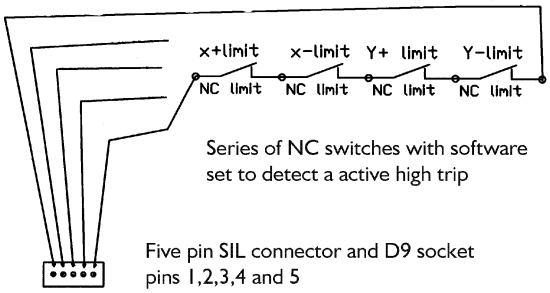

Pins 10, 11,12 and 13 of the computer parallel print port are normally TTL high (5 V). Shorting the pins to ground of the 5 pin white SIL header or pins 1,2,3 and 4 of the D9 socket sends the corresponding pins of the parallel port low (0 V) by setting the state of PC817 photocouplers. If the software is set active high, serially connected normally closed switches will trigger the relevant pin by sinking its current.

Schematic at Stepper Driver Schematic.pdf