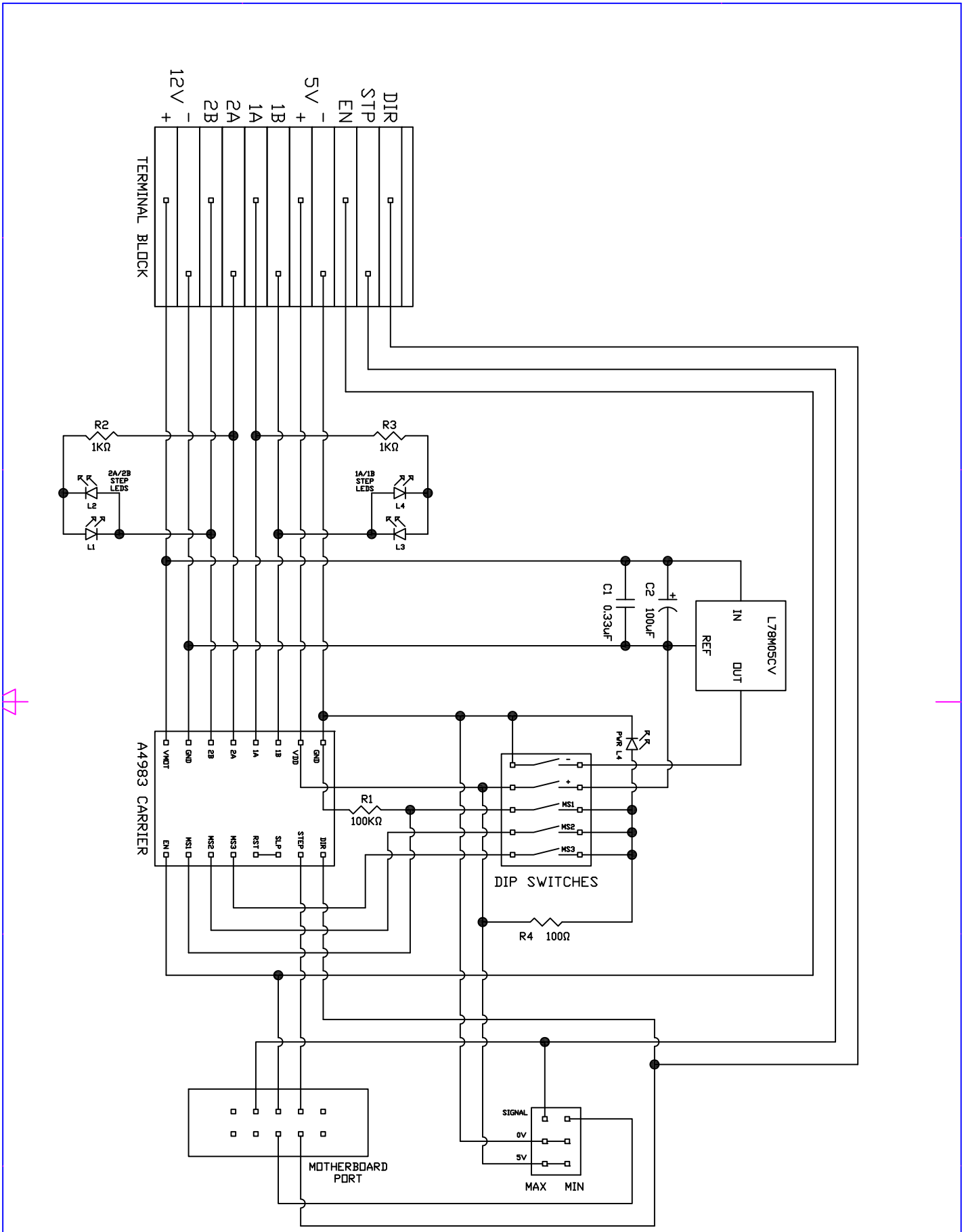

FILE: PG3_001-SCH.dwg	DATE: 1/13/2011	SCALE: NONE
TITLE: PG3_001 SCHEMATIC	DRAWN BY: C. BARRICK	
DWG NO: SD_001	REV: ---	SHEET: SCH