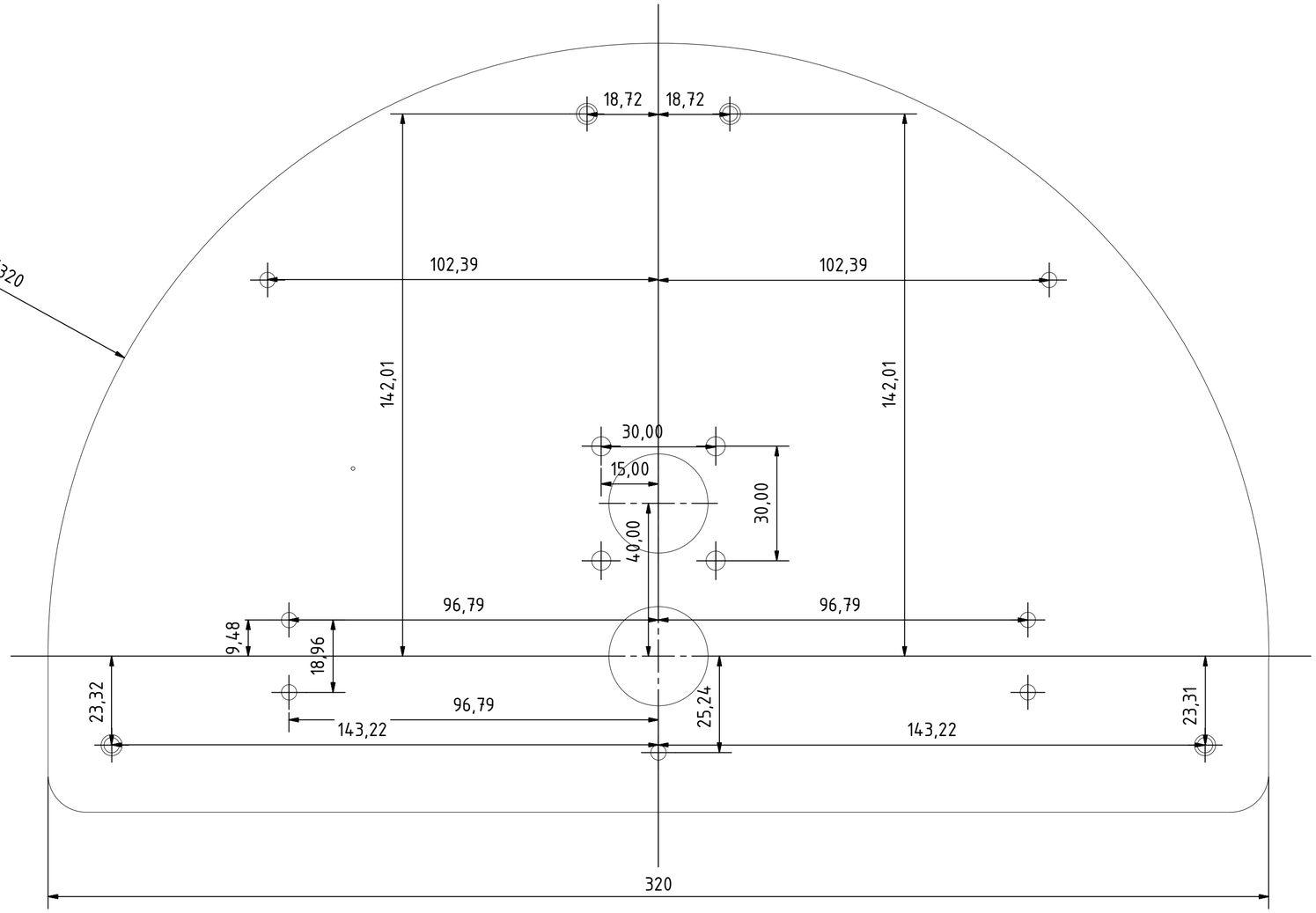top_platform