RepRap Morgan arm Theta

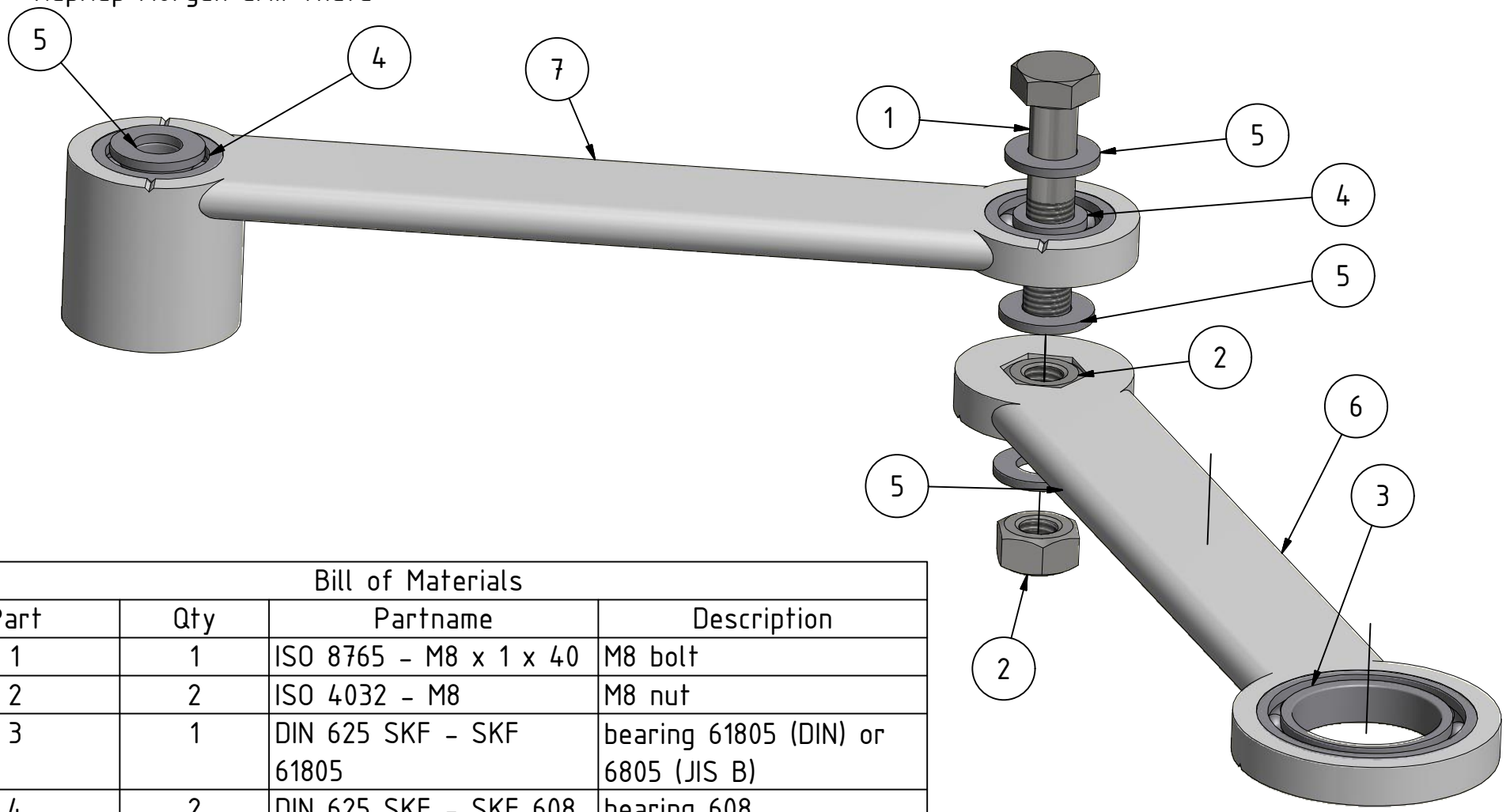

Bill of Materials			
Part	Qty	Partname	Description
1	1	ISO 8765 - M8 x 1 x 40	M8 bolt
2	2	ISO 4032 - M8	M8 nut
3	1	DIN 625 SKF - SKF 61805	bearing 61805 (DIN) or 6805 (JIS B)
4	2	DIN 625 SKF - SKF 608	bearing 608
5	4	DIN 125 - A 8,4	M8 washer
6	1	20-Morgan_arm_Theta_b	printed part
7	1	19-Morgan_arm_Theta_a	printed part